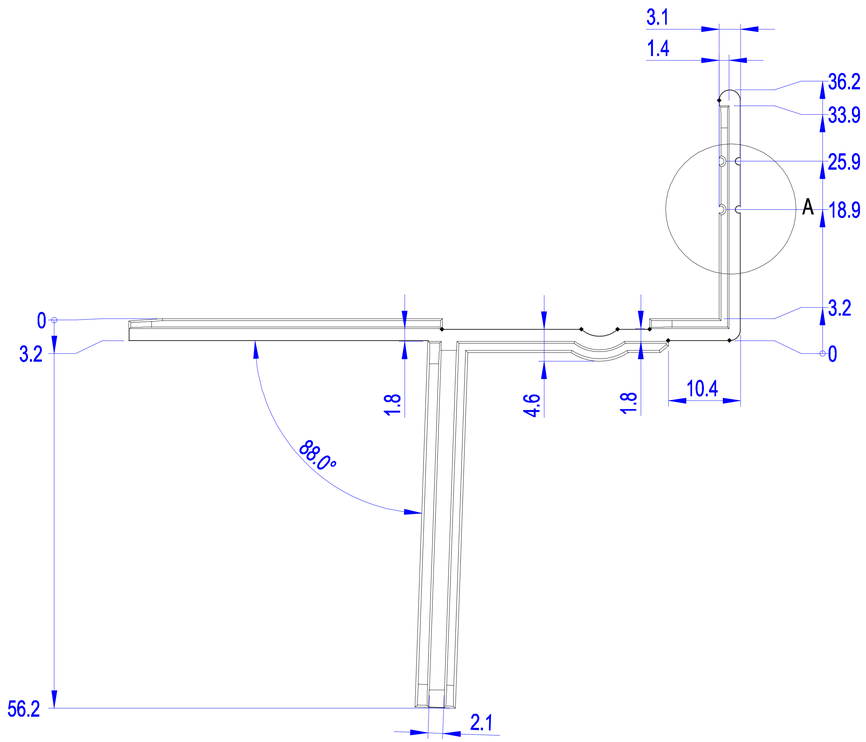
3.1
1.4
36.2
33.9
25.9
A
18.9
3.2
0
0
3.2
1.8
4.6
1.8
10.4
88.0°
56.2
2.1

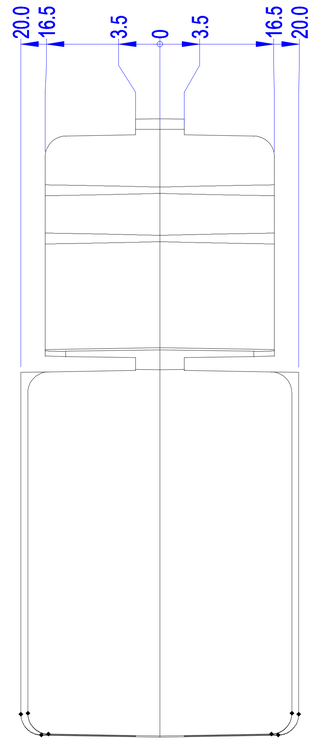
20.0
16.5
3.5
0
3.5
16.5
20.0

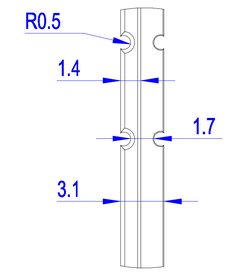
R0.5
1.4
1.7
3.1

DETAIL A

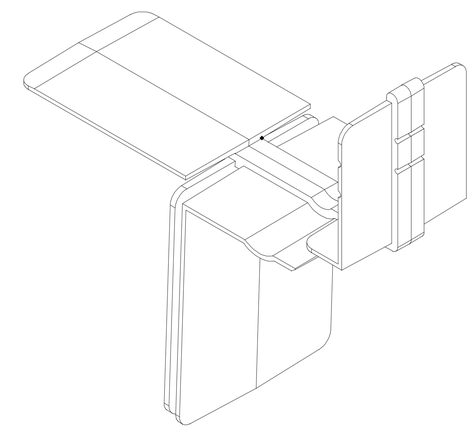

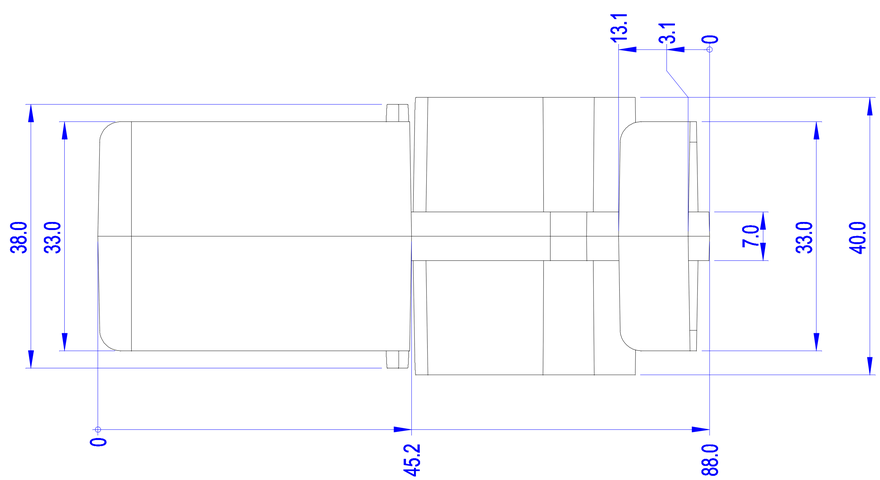
13.1
3.1
0
38.0
33.0
7.0
33.0
40.0
0
45.2
88.0